700-631
AIRGO-PROCARE IC WHEELCHAIR 22” WIDE
DETACHABLE DESK ARMS AND SWING-AWAY FOOTRESTS

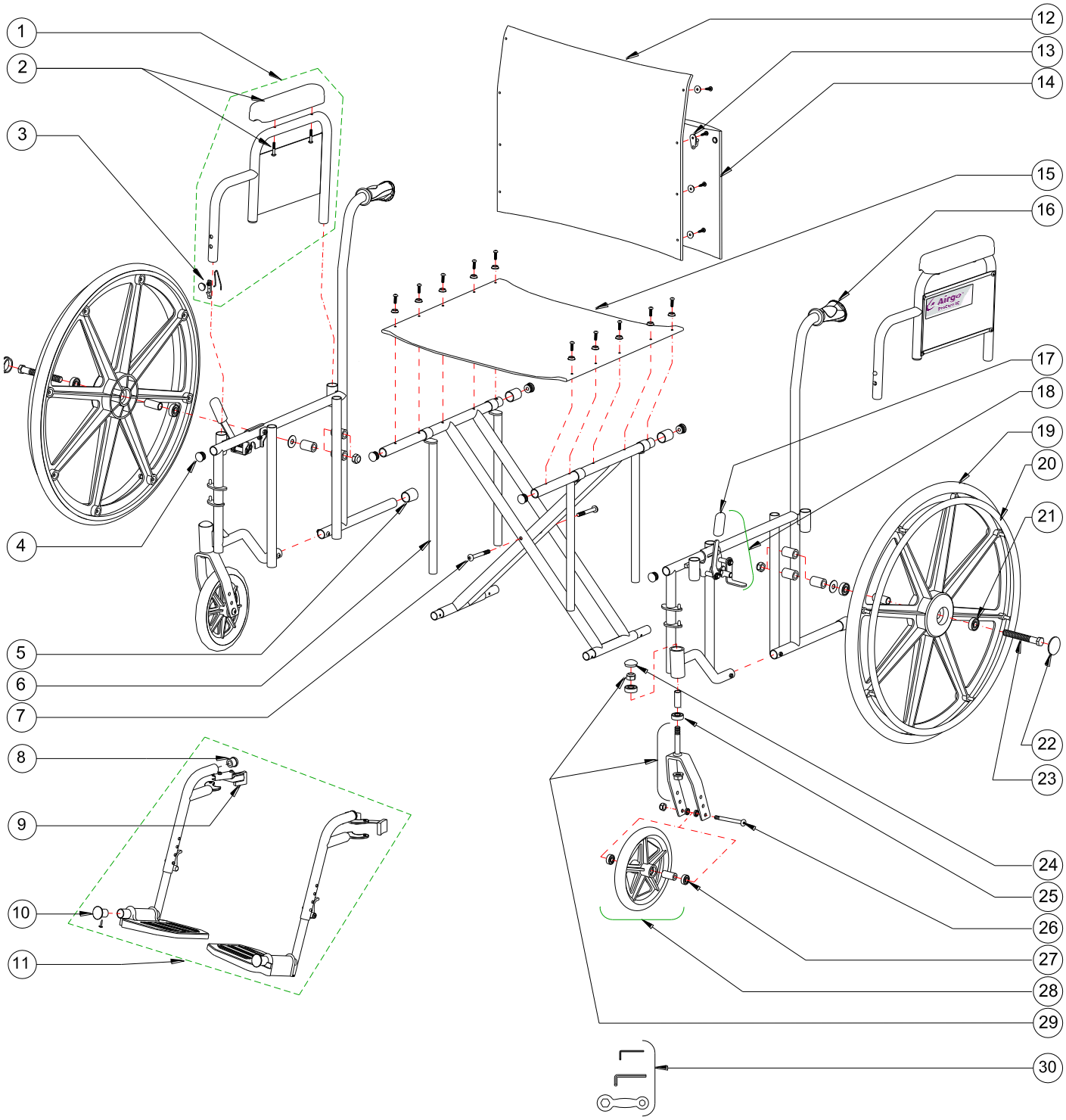

700-631
AIRGO-PROCARE IC WHEELCHAIR 22" WIDE
DETACHABLE DESK ARMS AND SWING-AWAY FOOTRESTS

Item #	AMG Part #	Item Description	Qty Per Unit	Sold by	UOM
1.	**B02-522**	Airgo-Procare IC Detachable Desk Armrest with Hardware - Left & Right	1	1	PR
2.	**B02-552**	Airgo-Procare Desk-Arm Pad, Black PE with Hardware - 2 ea / set	1	1	ST
3.	**B02-291**	Release Mechanism for Arm (Spring, Button & Latch)	2	1	EA
4.	**A02-425**	End Plug for Seat Rail, Black Plastic	2	1	EA
5.	**A02-429**	End Plug for Rear Frame, Black Plastic	2	1	EA
6.	**A02-659**	Sliding Tube Attachment for X-Wide W/C, Chrome Plated	4	1	EA
7.	**B02-821**	Hardware for Crossbar Pivot (Bolt M8x75 & Hex Nut)	2	1	ST
8.	**A02-430**	Bumper for Footrest, Rubber	2	1	EA
9.	**B02-340C**	Release Mechanism Assembly (Long Handle, 2 Bolts, 2 Hex Nuts & Spring) Left & Right – Chrome Plated	1	1	PR
10.	**B02-342**	Rubber Footplate Plug with Self-threading Screw	2	1	ST
11.	**B02-306**	Swing-Away Footrests, Tool-free Adjustable (Left & Right)	1	1	PR
12.	**B02-504**	Airgo-Procare IC Back Upholstery 22"x18", Black Vinyl, with Hardware (8 Screws, 6 Washers & 2 Washers with Hook)	1	1	EA
13.	**A02-801**	Washer with Hook - 2 ea / set	1	1	ST
14.	**A02-494**	Airgo-Procare IC Back Pocket 22", Black Vinyl	1	1	EA
15.	**701-002**	Seat Upholstery 22"x18",Black Vinyl, with Hardware 10 Screws & 10 Washers)	1	1	EA
16.	**A02-400**	Airgo-Procare IC Hand Grip, Black - Left & Right	1	1	PR
17.	**A02-404**	Airgo-Procare IC Brake Hand Grip, Black - 2 ea / set	1	1	ST
18.	**B02-236**	Pull-to-Brake Assembly for Detachable Arms W/C, Left & Right	1	1	PR
19.	**B02-162**	24" Rear Mag Wheel (Grey Solid Tire Wheel with 8 Spokes, Chrome Plated Handrim, 2 Bearings & Bushing)	2	1	EA
20.	**701-070**	Handrim with Hardware (Chrome Plated Handrim, 16 Washers & 8 Hex Nuts)	2	1	EA
21.	**A02-312**	6301 Bearing (ϕ37xϕ15x12mm)	4	1	EA
22.	**A02-449**	Hub Cap, Black	2	1	EA
23.	**B02-847**	Hardware for 24" Wheel, 22" Wide W/C(Bolt 9/16"x132mm, Spacer, Bearing Cover & Hex Nut)	2	1	ST
24.	**A02-447**	Front Fork Cover, Black Plastic	2	1	EA
25.	**A02-301**	6001 Bearing (ϕ28xϕ12x9mm)	4	1	EA
26.	**B02-831**	Hardware for Front Wheel (Bolt M8x78mm, 2 Spacers & Hex Nut)	2	1	ST
27.	**A02-302**	608 Bearing (ϕ22xϕ8x8mm)	4	1	EA
28.	**B02-131GY**	8" Solid Wheel Assembly, Grey (Grey Solid Wheel with 8 Spokes, 2 Bearings & Bushing)	2	1	EA
29.	**B02-143**	Aluminum Fork for 8" Caster, Anodized Black (Fork, Stem, Hex Nut & Flange Nut)	2	1	EA
30.	**A02-703**	Tool Package (Allen Keys # 4mm & 6mm and Wrench for 13mm & 19mm)	1	1	ST